REFERENCE, OWNERS MANUAL AND TOOL KIT - Z26SPD92AN/AH/BN/BH (C750956)

2026 RZR - RZR PRO S ULTIMATE (R01) - Z26SPD92AN/AH/BN/BH

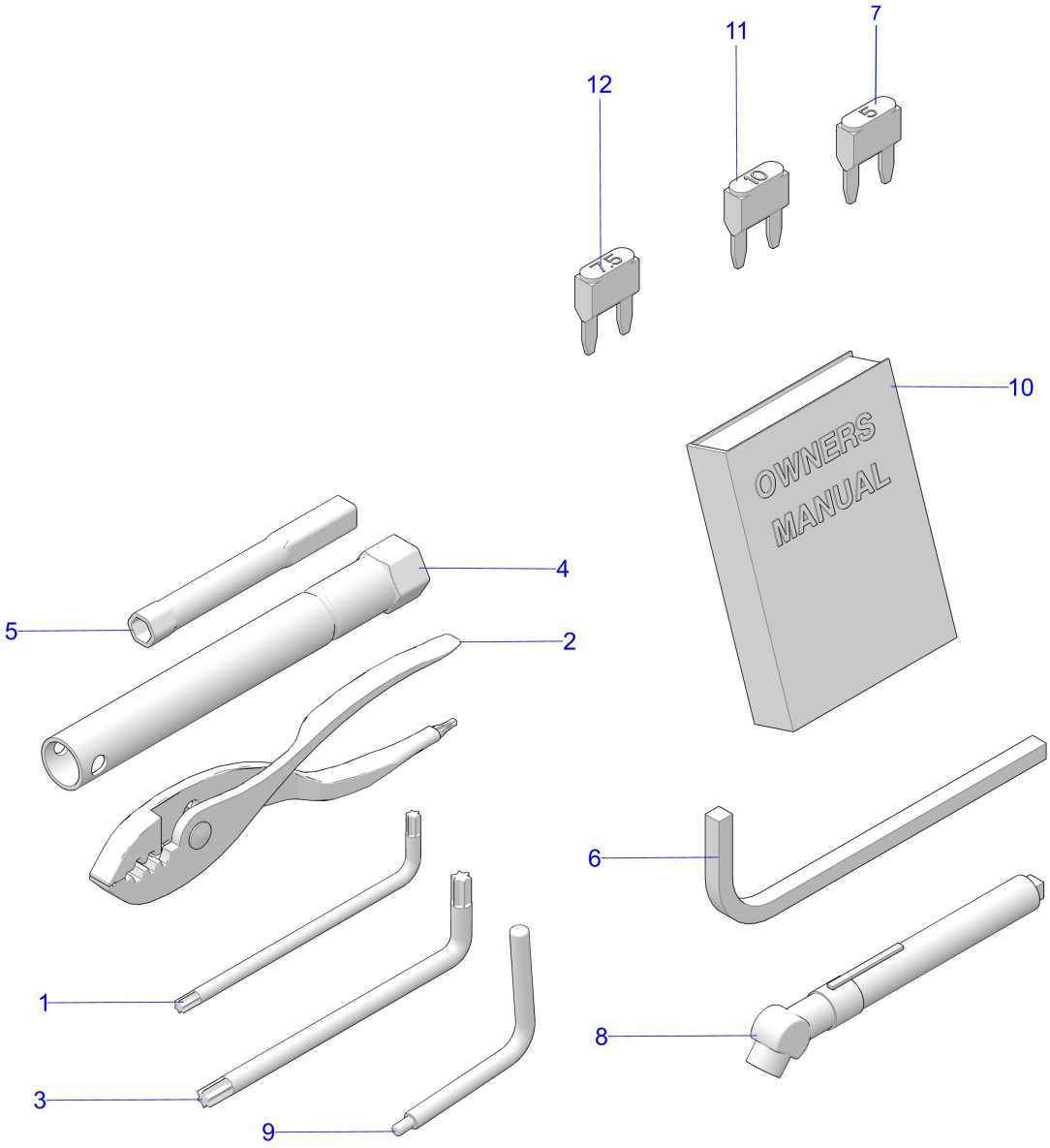

© 2025 Polaris Industries Inc.

C750956

Reference #	Part#	Description	Quantity
	2884001	K-ACCESSORY TOOL,RZR [INCL. 1-6]	1
1	2874858	WRENCH-TORX,T-27	1
2	2876389	PLIERS-COMBO, #2 ASSEMBLY	1
3	2879339	WRENCH-TORX,T-40	1
4	2880975	SOCKET-SPARK PLUG	1
5	2881189	DRIVER, NUT, 8MM	1
6	2881190	HANDLE, LONG-NUT DRIVER, 8MM	1
7	4011652	FUSE-5A,MINI BLADE	1
8	2878518	GAUGE, TIRE PRESSURE, 30 PSI	1
9	2883577	TOOL-BELT REMOVAL	1

10	9954478	MAN-OWN,RZR,26,PRO S	1
11	2434016	FUSE-IGNITION,10 AMP	1
12	4011068	FUSE - 7.5, MINI BLADE (BROWN)	1

Copyright 1996-2026 Polaris Industries U.S.A All rights reserved.